TK282, 200624

Bestämning av Performance Level, PL_r, och Safety Integrity Level, SIL

Anette Wester Odbratt

Bestämning Av PL_r

ISO/DIS 13849-1:2020

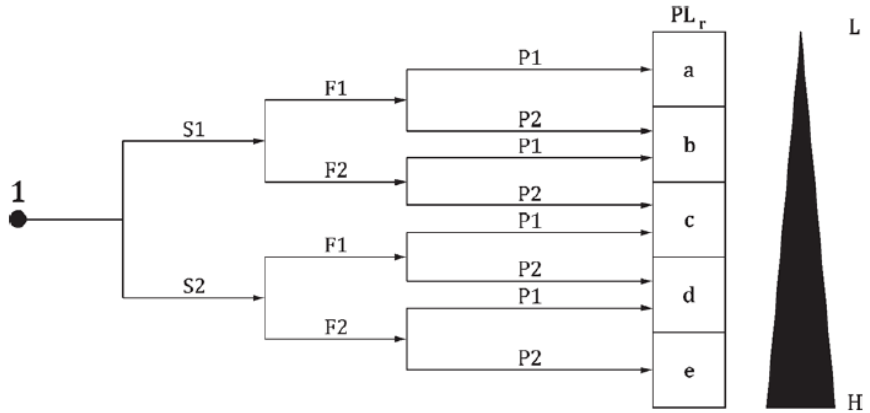

Key

1 starting point for evaluation of safety function's contribution to risk reduction

L low contribution to risk reduction

H high contribution to risk reduction

PL_r required performance level

Risk parameters:

S severity of injury

S1 slight (normally reversible injury)

S2 serious (normally irreversible injury or death)

F frequency and/or exposure to hazard

F1 seldom-to-less-often and/or exposure time is short

F2 frequent-to-continuous and/or exposure time is long

P possibility of avoiding hazard or limiting harm

P1 possible under specific conditions

P2 scarcely possible

S - severity

ISO/DIS 13849-1:2020

A.2.1 Severity of injury S1 and S2

In estimating the risk arising from a failure of a safety function only slight injuries (normally reversible) and serious injuries (normally irreversible) and death are considered.

To make a decision the usual consequences of accidents and normal healing processes should be taken into account in determining S1 and S2. For example, bruising and/or lacerations without complications would be classified as S1, whereas amputation or death would be S2.

Inga förändringar jämfört med EN ISO 13849-1:2015.

F - frekvens

ISO/DIS 13849-1:2020

A.2.2 Frequency and/or exposure times to hazard, F1 and F2

…

In case of no other justification, F2 should be chosen if the frequency is higher than once per 15 min.

F1 may be chosen if the accumulated exposure time does not exceed 1/20 of the overall operating time and the frequency is not higher than once per 15 min.

Inga förändringar jämfört med EN ISO 13849-1:2015.

Vi fick tyvärr inte igenom förslaget att gå tillbaka till ”higher than once per hour”, vilket gällde i EN ISO 10218-1:2008.

P – possibility of avoiding the hazardous event

EN ISO 13849-1:2015

A.2.3 Possibility of avoiding the hazardous event P1 and P2 and probability of occurrence

The probability of avoiding the hazard and the probability of occurrence of a hazardous event are both combined in the parameter P. When a hazardous situation occurs, P1 should only be selected if there is a realistic chance of avoiding a hazard or of significantly reducing its effect; otherwise P2 should be selected.

Where the probability of occurrence of a hazardous event can be justified as low, the PL_r may be reduced by one level, see A.2.3.2.

Möjligheten att reducera PL_r en nivå nedåt finns ej i DISen. Förslag till en avancerad metod att bestämma O-parametern har lagts under arbetets gång, men röstades bort.

P – possibility of avoiding the hazardous event

EN ISO 13849-1:2015

A.2.3.1 Possibility of avoiding the hazard

It is important to know whether a hazardous situation can be recognized before it can cause harm and be avoided. For example, can the exposure to a hazard be directly identified by its physical characteristics, or recognized only by technical means, e.g. indicators. Other important aspects which influence the selection of parameter P include, for example:

— speed with which the hazard arises (e.g. quickly or slowly);

— possibilities for hazard avoidance (e.g. by escaping);

— practical safety experiences relating to the process;

— whether operated by trained and suitable operators;

— operated with or without supervision.

O- probability of occurence of a hazardous event

EN ISO 13849-1:2015

A.2.3.2 Probability of occurrence of a hazardous event

The probability of occurrence of a hazardous event depends on either human behaviour or technical failures. In most cases, the appropriate probabilities are unknown or hard to identify. The estimation of the probability of occurrence of a hazardous event should be based on factors including:

— reliability data;

— history of accidents on comparable machines.

NOTE A low number of accidents does not necessarily mean that the occurrence of hazardous situations is low, but that the safety measures on the machines are sufficient.

Where comparable machines

— include the same risk(s) that the relevant safety function is intended to reduce,

— require the same process and operator action,

— apply the same technology causing the hazard.

P – possibility of avoiding the harm

ISO/DIS 13849-1:2020

A.2.3 Possibility of avoiding the harm

It is important to know whether a hazardous event can be recognized before it can cause harm and be avoided. For example, can the exposure to a hazard be directly identified by its physical characteristics, or recognized only by technical means, e.g. indicators. Other important aspects which influence the selection of parameter P include, for example:

a) speed with which the hazard arises (e.g. quickly or slowly);

b) possibilities for hazard avoidance (e.g. by escaping);

c) practical safety experiences relating to the process;

d) whether operated by trained and suitable operators;

e) operated with or without supervision.

When a hazardous event occurs, P1 should only be selected if there is a realistic chance of avoiding a hazard or of significantly reducing its effect; otherwise P2 should be selected.

A possible methodology that can be used to determine the parameter P is the following:

— determine the letter of each item of the Table A.1 that reflects the specific application (only one choice for each item is possible);

— count the number of chosen letters “A”, “B” and “C”;

— determine the correspond value of the parameter P in Table A.2.

Only one choice for each item is possible in Table A.1.

P – possibility of avoiding the harm

ISO/DIS 13849-1:2020

Table A.1 — Determination of parameter P based on five factors

Factor	C	B	A
1. Use of the machine by		Unskilled person	Skilled person
2. Speed of the part of the machine that can create a hazardous event (depending on the specific machine)	High speed event (e.g. above 1 000 mm/s, time to hazard < 1 s)	Medium speed event (e.g. 251 mm/s to 1 000 mm/s, time to hazard < 3 s)	Low or very low speed event (e.g. max of 250 mm/s, time to hazard ≥ 3 s)
3. Spatial possibility to withdraw from the hazard	Not possible	Possible in less than 50 % of the cases	Possible in more or equal to 50 % of the cases
4. Possibility of recognition/awareness of the hazard	Not possible (e.g. instrumentation necessary, humans sense are not able to perceive the hazard, environmental conditions hide the perception)	Possible only in less than 50 % of the cases	Possible in more or equal to 50 % of the cases
5. Complexity of the operations (human interaction in terms of numbers of operation and/or timing available for this operations)		High complexity (e.g. troubleshooting) or Medium complexity (e.g. use hold-to-run control to setup a part of the machine)	Low complexity (e.g. adjust the workpiece clamps) or Very low complexity / or no interaction (e.g. put a workpiece into the machine)

3.1.56
skilled person
person with relevant training, education, and experience to enable him or her to perceive risks and to avoid hazards associated with the relevant equipment

P – possibility of avoiding the harm

ISO/DIS 13849-1:2020

Table A.2 — Selection of parameter P1 or P2

Overall score		Parameter "P"
one or more "C"		P2
no "C", three or more "B"		P2
no "C", two "B", the rest "A"		P1 or P2 depending on the specific machine
no "C", one or no "B", the rest "A"		P1

Bestämning av PL_r

5.3 Determination of required performance level (PL_r) for each safety function

…

Because the methodology for determining the required performance level includes subjective estimations, some variability is acceptable in the practical application of particular cases.

…

©ABB

IEC 62061 (CDV)

Annex A Determination of required safety integrity

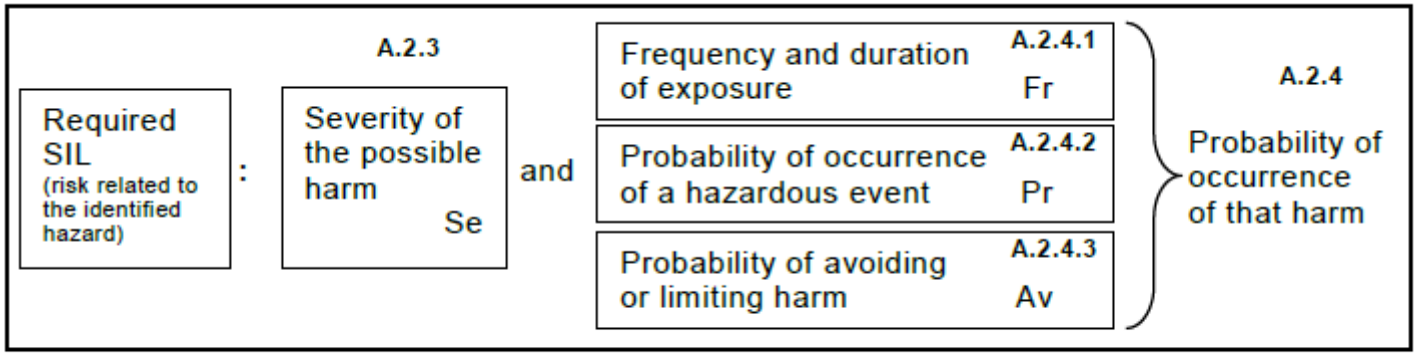

Figure A.1 - Parameters used in risk estimation

IEC 62061 (CDV)

Annex A Determination of required safety integrity

Table A.1 – Severity (Se) classification

Consequences	Severity (Se)
Irreversible: death, losing an eye or arm	4
Irreversible: broken limb(s), losing a finger(s)	3
Reversible: requiring attention from a medical practitioner	2
Reversible: requiring first aid	1

IEC 62061 (CDV)

Annex A Determination of required safety integrity

Table A.2 – Frequency and duration of exposure (Fr) classification

Frequency and duration of exposure (Fr)		
Frequency of exposure	Frequency, Fr	
	Duration of exposure ≥ 10 min	Duration of exposure < 10 min
≥ 1 per h	5	5
< 1 per h to ≥ 1 per day	5	4
< 1 per day to ≥ 1 per 2 weeks	4	3
< 1 per 2 weeks to ≥ 1 per year	3	2
< 1 per year	2	1

IEC 62061 (CDV)

Annex A Determination of required safety integrity

Table A.3 – Probability (Pr) classification

Probability of occurrence	Probability (Pr)
Very high	5
Likely	4
Possible	3
Rarely	2
Negligible	1

IEC 62061 (CDV)

Annex A Determination of required safety integrity

Table A.4 – Probability of avoiding or limiting harm (Av) classification

Probabilities of avoiding or limiting harm (Av)	
Impossible	5
Rarely	3
Probable	1

IEC 62061 (CDV)

Annex A Determination of required safety integrity

Table A.5 – Parameters used to determine class of probability of harm (Cl)

ID.	Hazard	Fr	Pr	Av	Cl
1					
2					
3					
4					

IEC 62061 (CDV)

Annex A Determination of required safety integrity

3291 **Table A.6 – Matrix assignment for determining the required SIL (or PL_r) for a safety**
3292 **function**

Consequences	Severity Se	Class CI = Fr + Pr + Av												
		3	4	5	6	7	8	9	10	11	12	13	14	15
Death, losing an eye or arm	4	SIL 1		SIL 2			SIL 2			SIL 3			SIL 3	
		PL_r b	PL_r c	PL_r d			PL_r d			PL_r e			PL_r e	
Permanent injury, losing fingers	3			OM			SIL 1			SIL 2			SIL 3	
				PL_r a			PL_r b	PL_r c		PL_r d			PL_r e	
Reversible injury, medical attention	2						OM			SIL 1			SIL 2	
		No SIL (or PL) required					PL_r a			PL_r b	PL_r c		PL_r d	
Reversible injury, first aid	1									OM			SIL 1	
		OM: Other Measures (e.g. basic safety principles)								PL_r a			PL_r b	PL_r c

EXAMPLE: For a specific hazard with an Se assigned as 3, an Fr as 4, an Pr as 5 and an Av as 5 then:

CI = Fr + Pr + Av = 4 + 5 + 5 = 14

Using this table, this would lead to a SIL 3 or PL e being assigned to the safety function that is intended to mitigate against the specific hazard.

NOTE 1 SIL 2 at Class 3 and 4 in the previous published edition is now reduced to SIL 1 because of the low score for the classes of Frequency, Probability and Avoiding Harm.

NOTE 2 SIL 2 at Class 5, 6 and 7 is not calibrated in line with the rest of the table because it is the intention to take account of the moderate score for the classes of Frequency, Probability and Avoiding Harm in combination with the possibility of death as a consequence.

NOTE 3 Due to characteristics of risks present at machinery SIL 4 is not considered in this standard. For SIL 4 see IEC 61508-1.

NOTE 4 This correspondence between SIL and PLr is valid only for the required level and not for the achieved level.

Grey area = Safety measures recommended

Consequences	Severity Se	Class CI 4	5 - 7	8 - 10	11 - 13	14 - 15	Frequency, Fr		Probability of hzd. event, Pr		Avoidance Av	
Death, loosing an eye or arm	4	SIL 2	SIL 2	SIL 2	SIL 3	SIL 3	≥ 1 per hr	5	Common	5		
Permanent, loosing fingers	3		OM	SIL 1	SIL 2	SIL 3	<1 per hr - ≥ 1 per day	5	Likely	4		
Reversible, medical attention	2			OM	SIL 1	SIL 2	<1 per day - ≥1 per 14days	4	Possible	3	Impossible	5
Reversible, first aid	1				OM	SIL 1	<1 per 2wks - ≥1 per yr	3	Rarely	2	Possible	3
							<1 per yr	2	Negligible	1	Likely	1

ABB